©..... Welfit Oddy Pty Ltd.
All Rights Reserved Reg. No.....

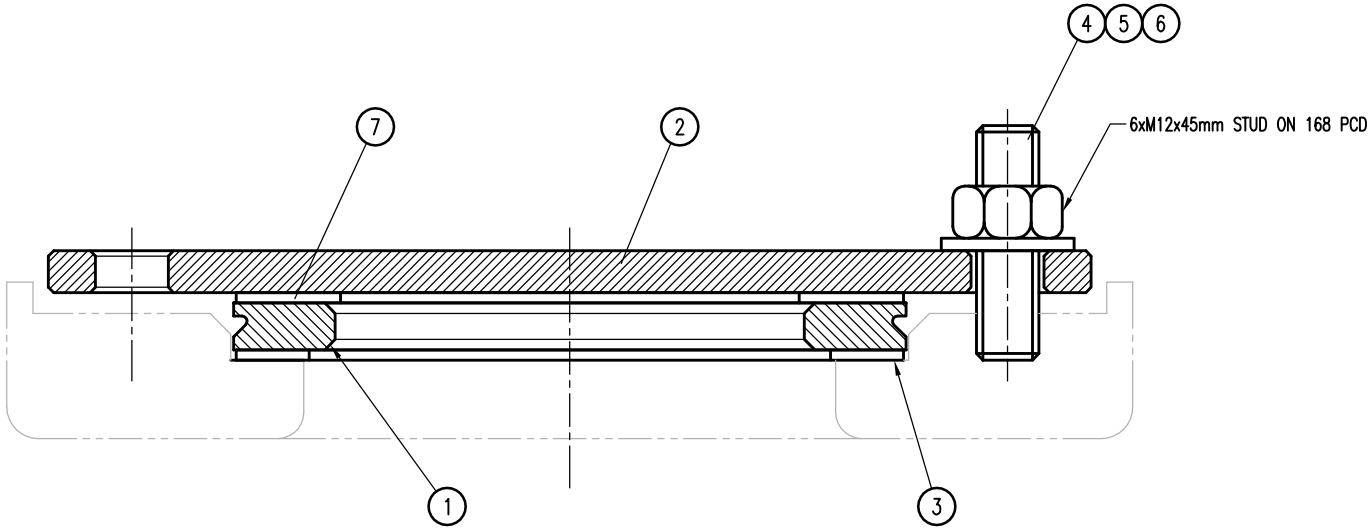

ITEM	QTY	DESCRIPTION	L	B	MATERIAL	PART NUMBER	Kg
7	1	GAS,PTF-BLANK,3"	2	128	2MM, PTFE	GAS0004PTF-A	0.0
6	6	NUT,HEX-M12			S/S	M12000NUT-S	0.0
5	6	WASHER,SPRING-M12X3MM			S/S	M12030WSS-S	0.0
4	6	STUD,FULL-M12x45mm	45		S/S	M12045STF-S	0.0
3	1	GAS,PTF-ø128xø100x2mm	128	100	2MM, PTFE	GAS0005PTF-A	0.0
2	1	BLANK,3",168PCD	8	200	ø200x10mm, S/S 316L	FLN0015TDC-B	2.0
1	1	RING,INSERT,ø129xø91x9mm	9	129	Ø130MM, S/S 316L	FLN0014TDC-A	1.0

TOLERANCE UNLESS OTHERWISE STATED

LINEAR	0 - 20	21 - 200	201 - 1000	1001 - 3000	3001 - 13000	ANGLES
	±0.5	±1.0	±1.5	±2.0	±3.0	±1°

UNAUTHORISED REPRODUCTION AND OR USE OF THIS DRAWING AND IT'S CONTENTS ARE STRICTLY PROHIBITED.

PROJECTION
SCALE: 1:1
ECR No: 7560
DRAWN: CHENDRICKS
CHECK:
APPRV:
DATE: 14/03/2003
Vers. 0
Var. 0

DESCRIPTION:
TOP DISCH-3",PROV,INSERT
6xM12STD,168PCD,INSERT RING,PTFE

Welfit Oddy

DRAWING NR:
TDC0057JFO999-A

FORMAT: A3H

DATE.	REVISIONS	BY